project collection

PE-LYRA

Lyra pendant, ø80mm, 3000k, 36°,2m drop

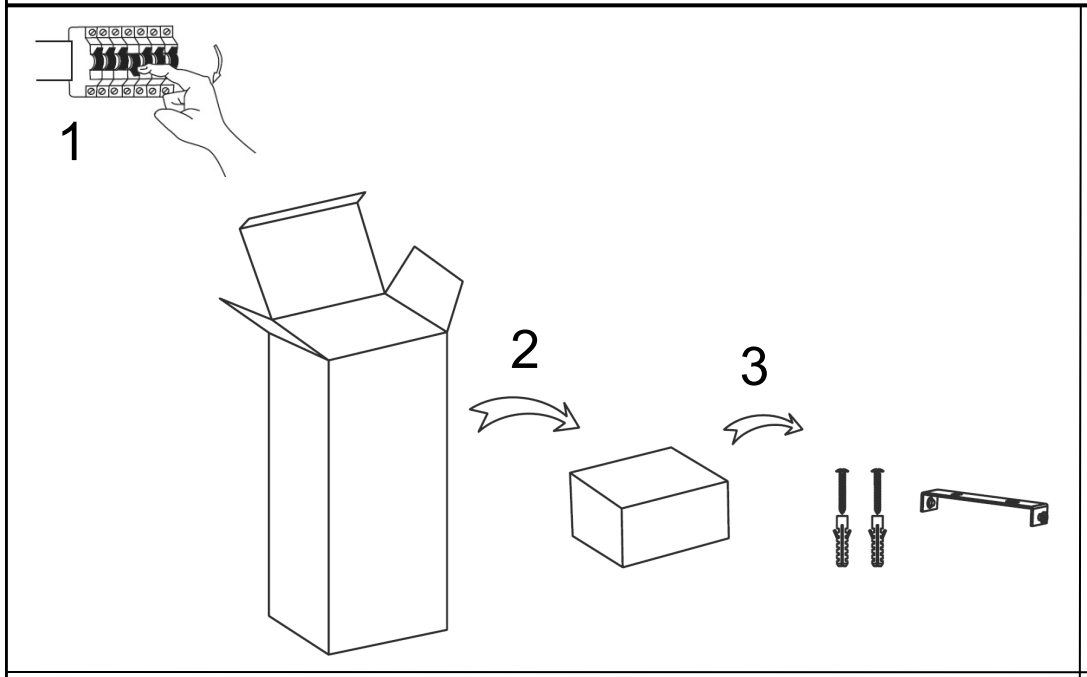

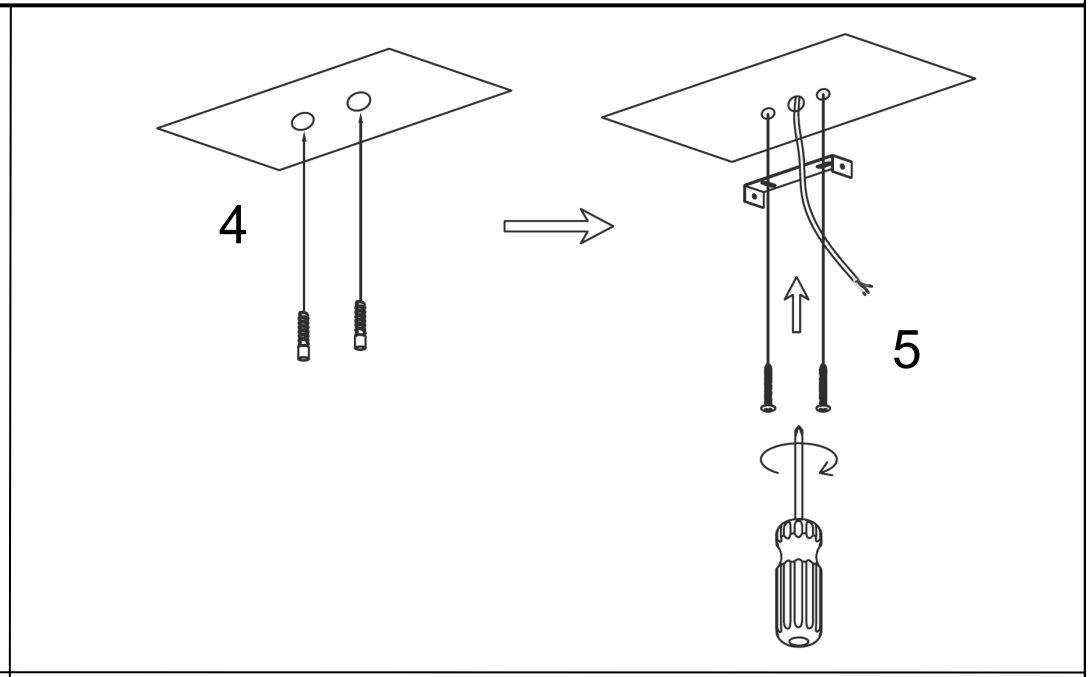

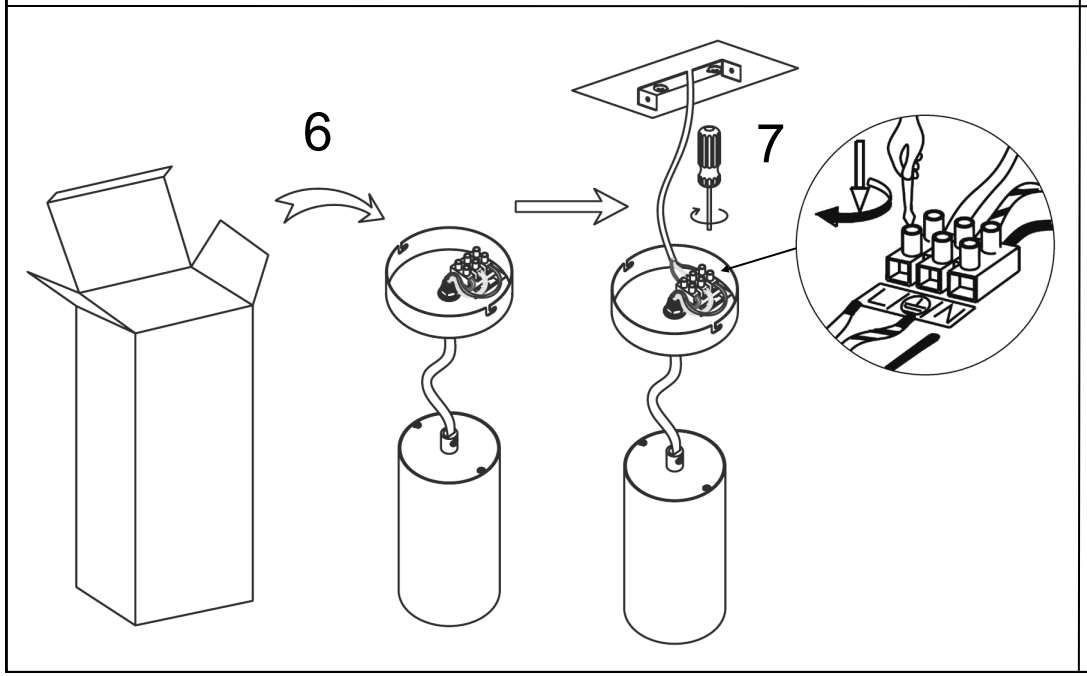

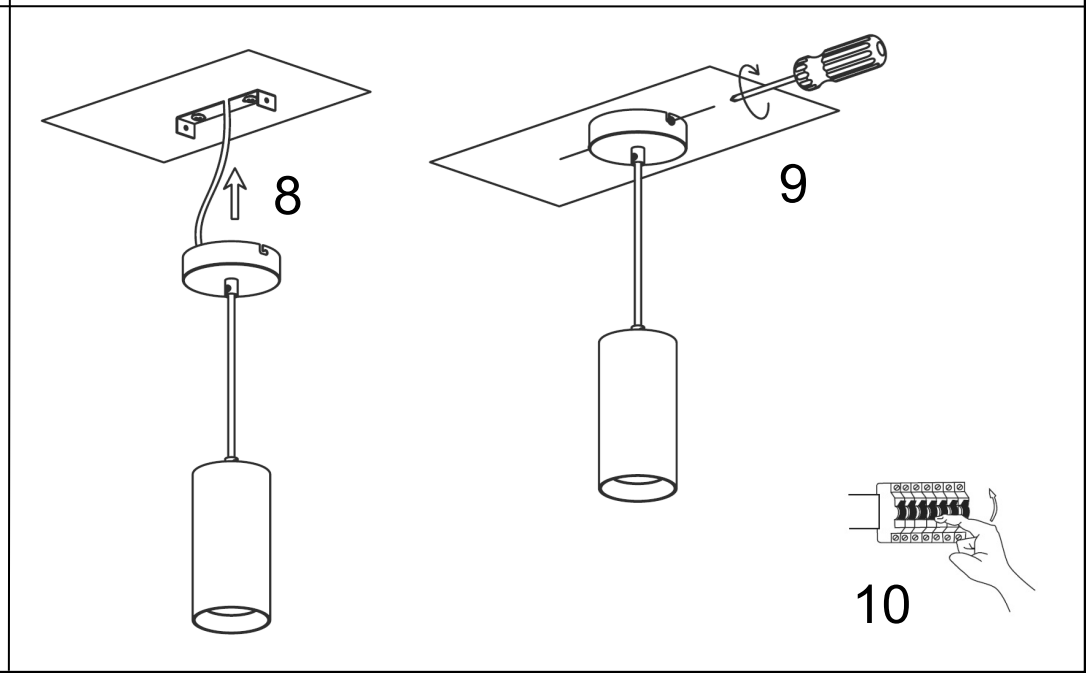

SAFETY INFORMATION: (Please retain for future reference)

- Always turn off the mains supply before commencing the installation of this fitting .
- This is a Class I product and requires an Earth connection – 230 (240) Volts – 50Hz AC.
- This product must be installed in accordance with the National Building Regulations, if in doubt consult a competent electrician.
- Do not cover the light source or lamp shade.
- Do not modify or alter any product before or after installation. This will invalidate your warranty and may render the product un-safe.

POSITION

- This fitting is suitable for installation in indoor locations only.
- Suitable for Ceiling mount only.
- Ensure sufficient access to the fitting to enable safe maintenance.
- The luminaire should be positioned so that prolonged into the luminaire at a distance closer than 0.2m is not expected.

LED INFORMATION:

- This fitting is suitable for dimming.
- The LED lamps are not replaceable, when the lamps reach the end of their life the whole luminaire shall be replaced.

AFTERCARE AND MAINTENANCE:

- Always disconnect power supply when servicing or cleaning.
- Clean only with a dry or slightly damp cloth.
- Do Not use any abrasive cloths or cleaners as this may damage the product.

This symbol on the product indicates that this must not be disposed of with your other household waste. It is your responsibility to dispose of your waste equipment by handing it over to a designated collection point for the recycling of wasted electrical and electronic equipment. .For more information about where you can drop off your waste equipment for recycling, please contact your local city officer, your household waste disposal service or the shop where you purchased the product.

Q.C APPROVED
2/12/2021
ISSUE 2