project collection

CE-HONSQ2

Honos Square Twin, 2xGU10

CE UK CA

1

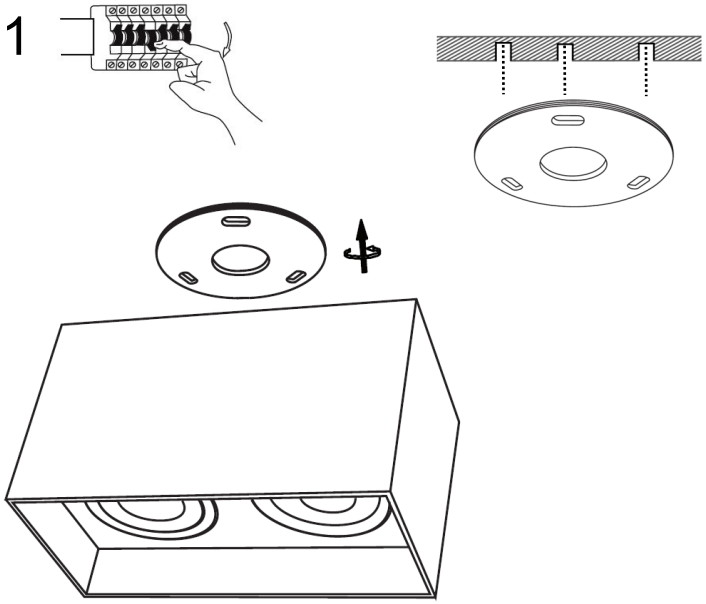

2

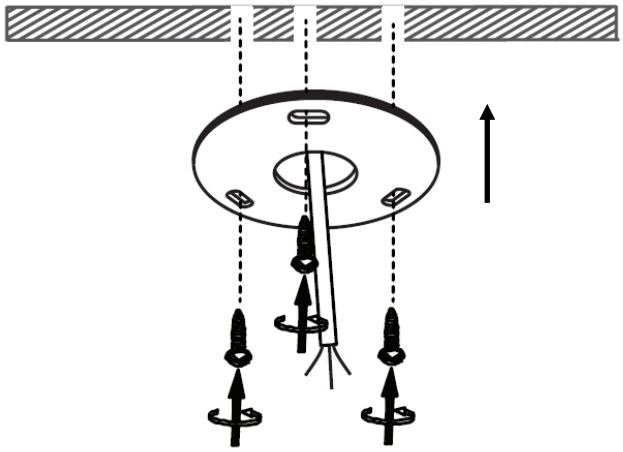

3

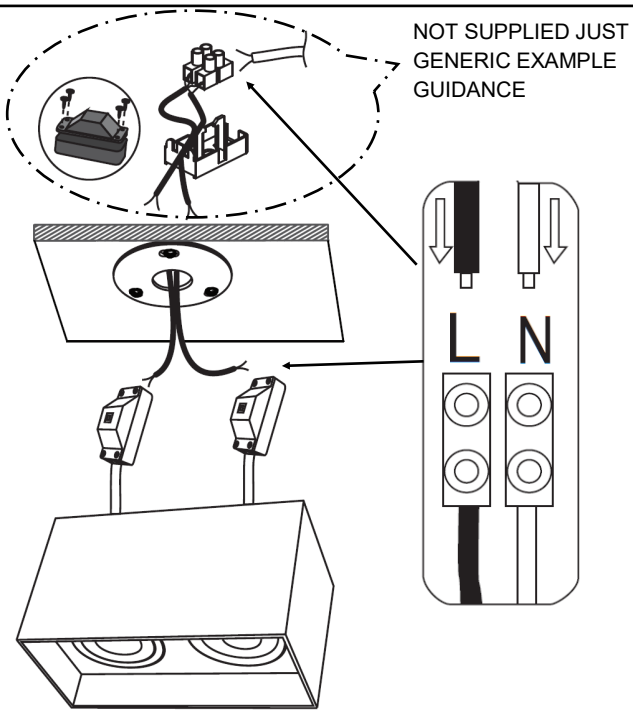

4

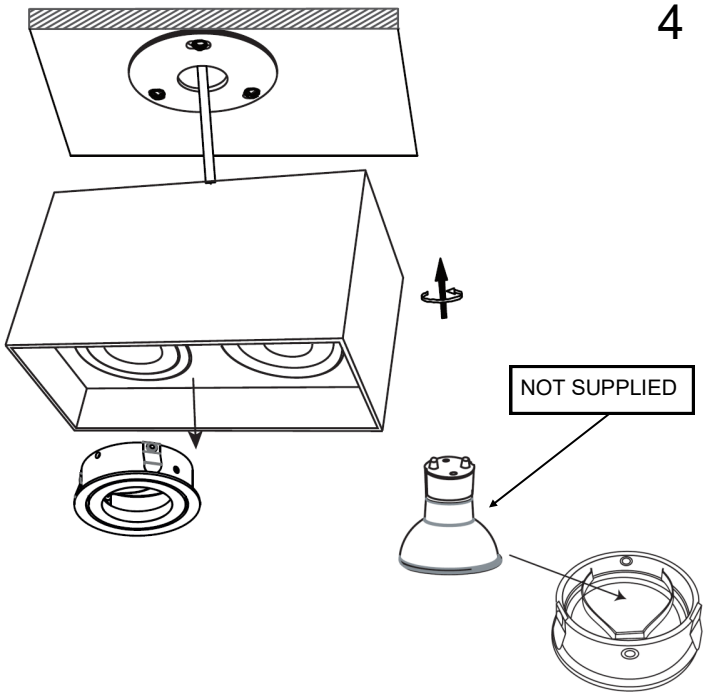

5

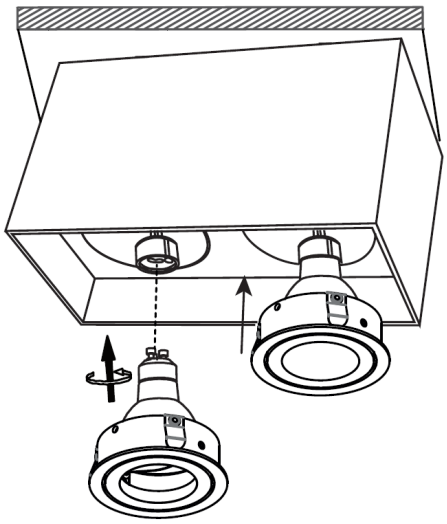

6

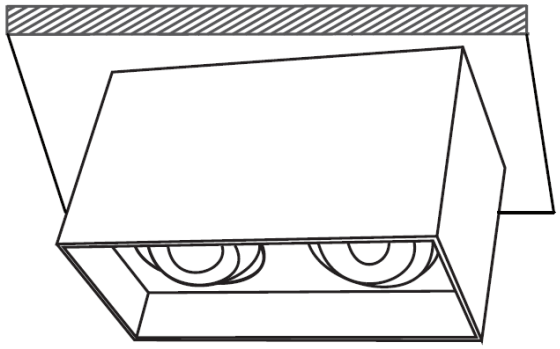

20° TILT ANGLE

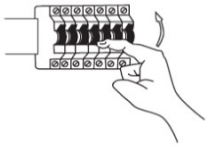

SAFETY INFORMATION: (Please retain for future reference)

- Always turn off the mains supply before commencing the installation of this fitting .
- This is a Class 2 product and does not requires an Earth connection – 230 (240) Volts – 50Hz AC.
- This product must be installed in accordance with the national building and wiring regulations, if in doubt consult a competent electrician.
- Do not cover the light source or lamp shade.
- Do not modify or alter any product before or after installation. This will invalidate your warranty and may render the product un-safe.

POSITION

- This fitting is suitable for installation in Indoor locations only.
- Suitable for Ceiling mount only.
- Ensure sufficient access to the fitting to enable safe maintenance.

LAMP INFORMATION:

- Used LED lamps Only.
- Dimming of the luminaire is possible when using lamps that are dimmable.

AFTERCARE AND MAINTENANCE:

- Always disconnect power supply when servicing or cleaning.
- Clean only with a dry or slightly damp cloth.
- Do Not use any abrasive cloths or cleaners as this may damage the product.

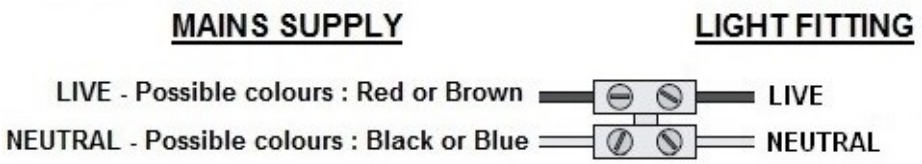

This symbol on the product indicates that this must not be disposed of with your other household waste. It is your responsibility to dispose of your waste equipment by handing it over to a designated collection point for the recycling of wasted electrical and electronic equipment. . For more information about where you can drop off your waste equipment for recycling, please contact your local city officer, your household waste disposal service or the shop where you purchased the product.

Q.C APPROVED 19/08/2021 ISSUE 2