searchlight

85981-3

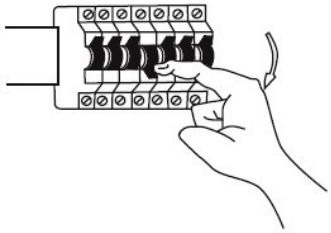

1

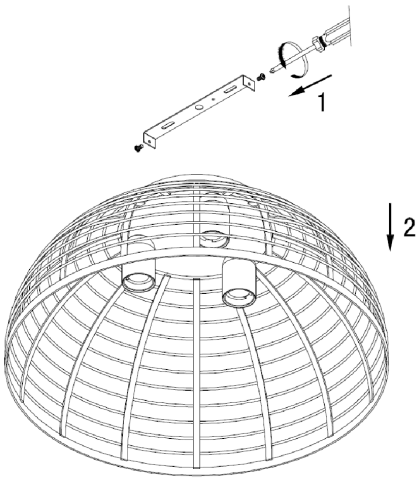

2

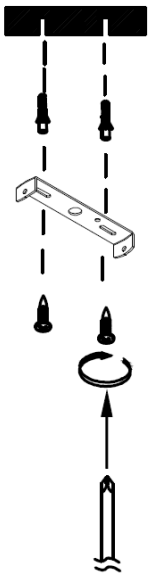

3

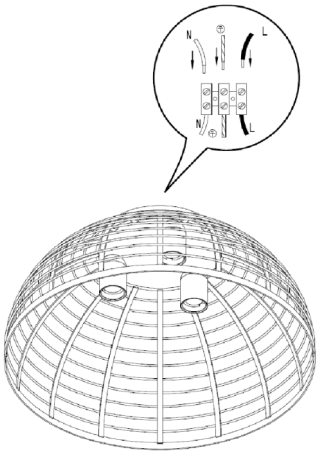

MAINS SUPPLY | **LIGHT FITTING**

LIVE - Possible colours : Red or Brown — LIVE

EARTH - Un sleeved copper or (Green / Yellow) — EARTH

NEUTRAL - Possible colours : Black or Blue — NEUTRAL

4

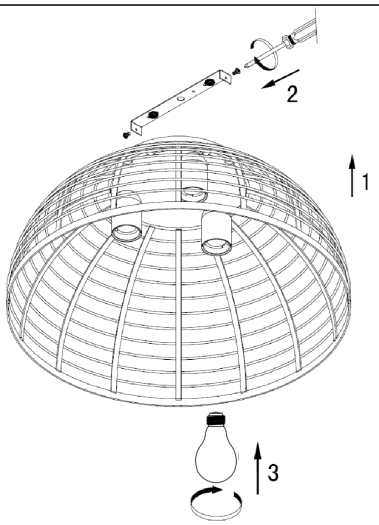

5

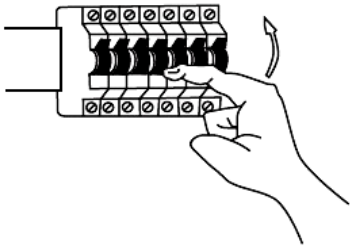

6

Q.C APPROVED 27/06/2022 ISSUE 1