the lighting collection

700831

ASSEMBLY INSTRUCTIONS

1

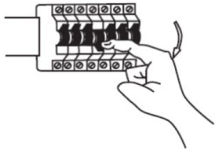

7

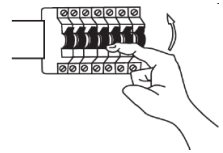

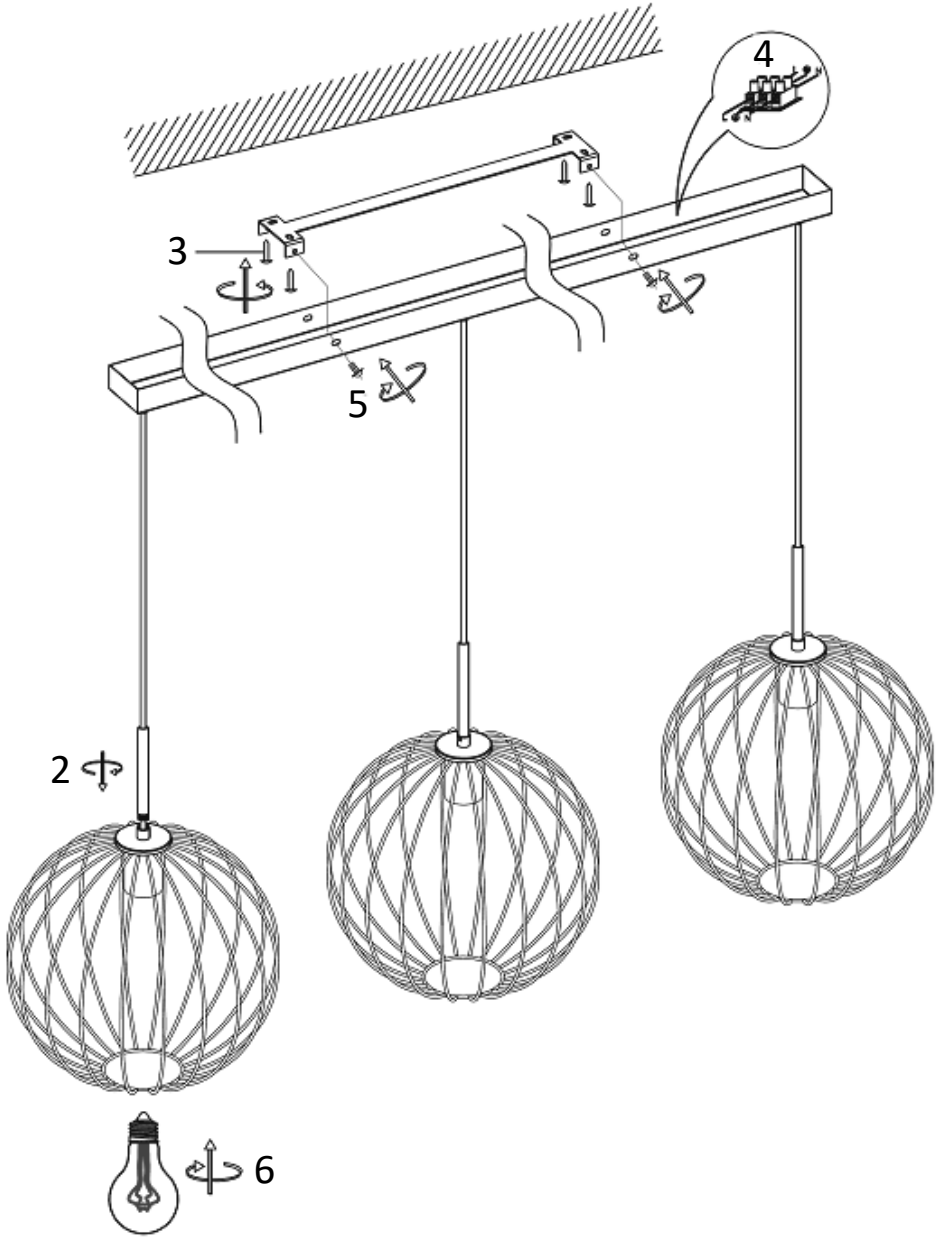

Q.C APPROVED 25/08/2020 ISSUE 1

SAFETY INFORMATION: (Please retain for future reference)

- Always turn off the mains supply before commencing the installation of this fitting .
- This is a Class 1 product and requires an Earth connection – 220 - 240 Volts – 50Hz AC.
- This product must be installed in accordance with the national building regulations, if in doubt consult a competent electrician.
- Do not stare at the operating lamp .
- Do not modify or alter any product before or after installation. This may Invalidate your warranty and may render the product un-safe.

POSITION

- This fitting is suitable for installation in Indoor locations only .
- Ensure sufficient access to the fitting to enable safe maintenance.
- The Luminaire should be positioned so that prolonged staring into the luminaire at a distance closer than 0.2m is not expected

LED INFORMATION:

- We recommend LED lamps only.
- Do not exceed the maximum wattage and bulb type stated on the lamp holder.
- This fitting is suitable for dimming using an external dimmer.

AFTERCARE AND MAINTENANCE:

- Always disconnect power supply when servicing or cleaning.
- Clean only with a dry or slightly damp cloth.
- Do no use any abrasive cloths or cleaners as this may damage the product .