LUX & BELLE

65410 / EU65410

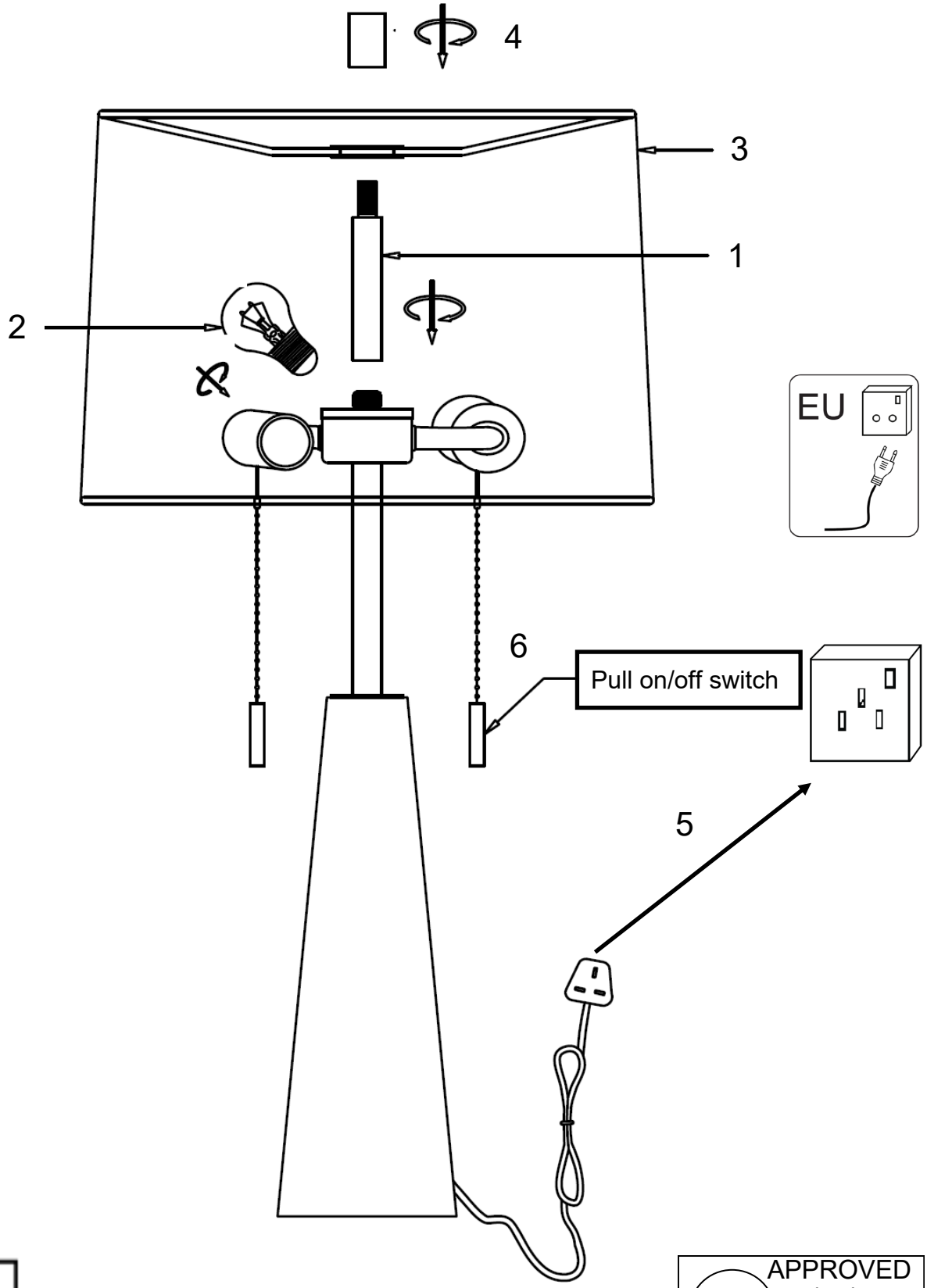

Q.C APPROVED 17/01/2024 ISSUE 1