searchlight

63125-5

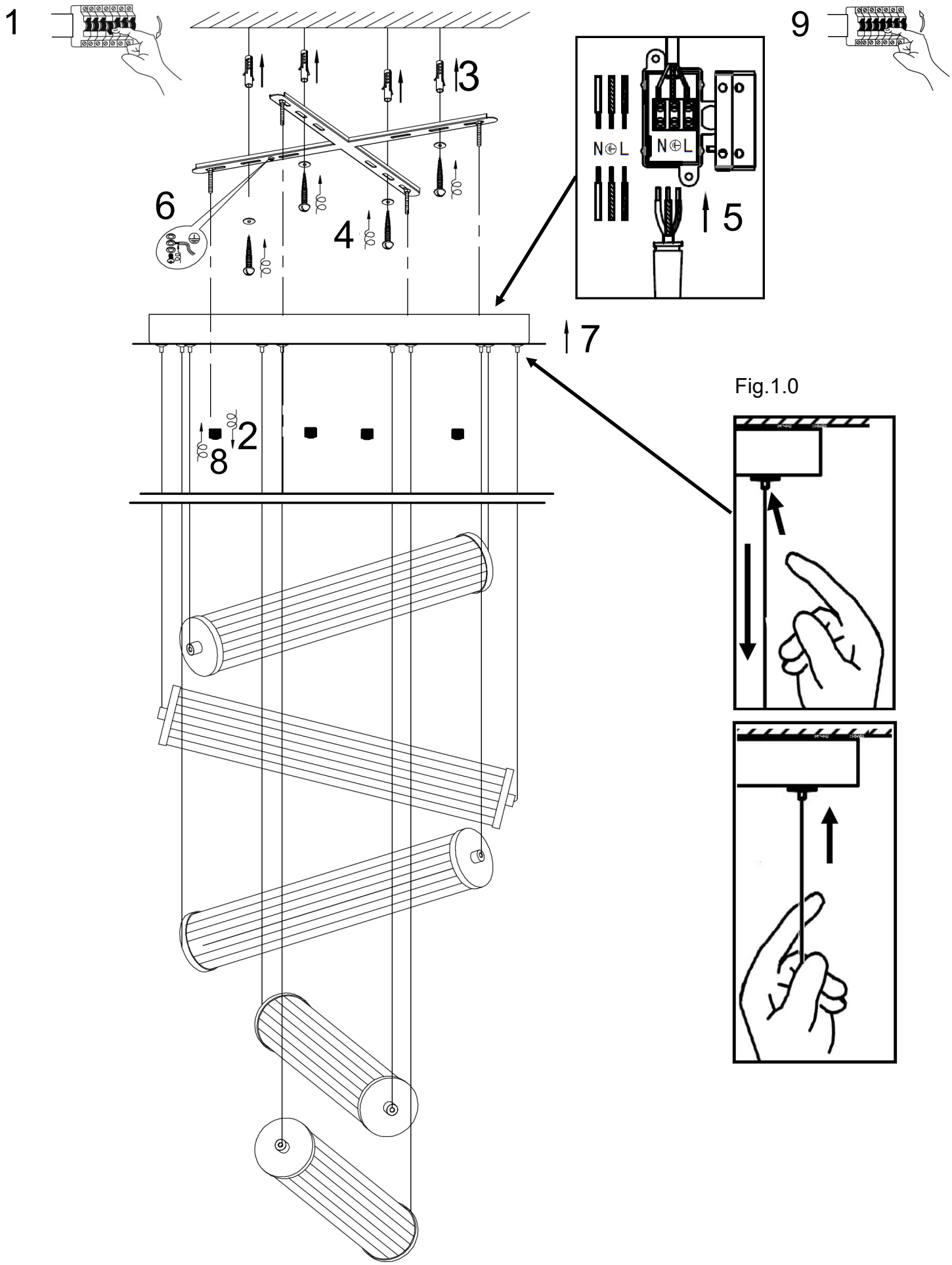

Fig.1.0

SAFETY INFORMATION: (Please retain for future reference)

- Always turn off the mains supply before commencing the installation of this fitting .
- This is a Class 1 product and does requires an Earth connection – 220 (240) Volts – 50Hz AC.
- This product must be installed in accordance with the national building regulations, if in doubt consult a qualified electrician.
- This fitting is suitable for installation in Indoor locations only .
- Do not mount the fitting in a damp atmosphere.
- The Luminaire should be positioned so that prolonged staring into the luminaire at a distance closer than 0.2m is not expected
- Ensure sufficient access to the fitting to enable safe maintenance.

LAMP INFORMATION

- The integrated LED lamps are not replaceable, when the LED lamps reach the end of their life the whole luminaire shall be replaced.
- The LED chips bords are not removable.
- This fitting is suitable for dimming

ADDITIONAL INFORMATION:

- The fitting has a 'rise and fall' mechanism to allow height adjustment. To shorten the fitting hold each wire in turn and gently push upwards to the desire height, the support wire will freely move into the ceiling can. If required the fitting can be lengthened back to the original height, push the small metal release pins in individually, this will release the clamp and allow each support wire to become free to lengthen. (see Fig 1.0)

AFTERCARE AND MAINTENANCE:

- Always disconnect power supply when servicing or cleaning.
- Clean only with a dry or slightly damp cloth.
- Do no use any abrasive cloths or cleaners as this may damage the product

Q.C APPROVED 15/07/2020 ISSUE 1