searchlight

# 6218-8

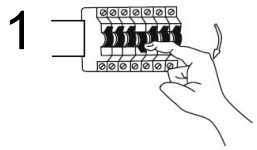


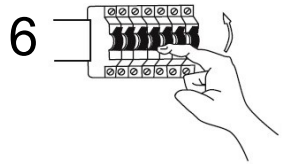


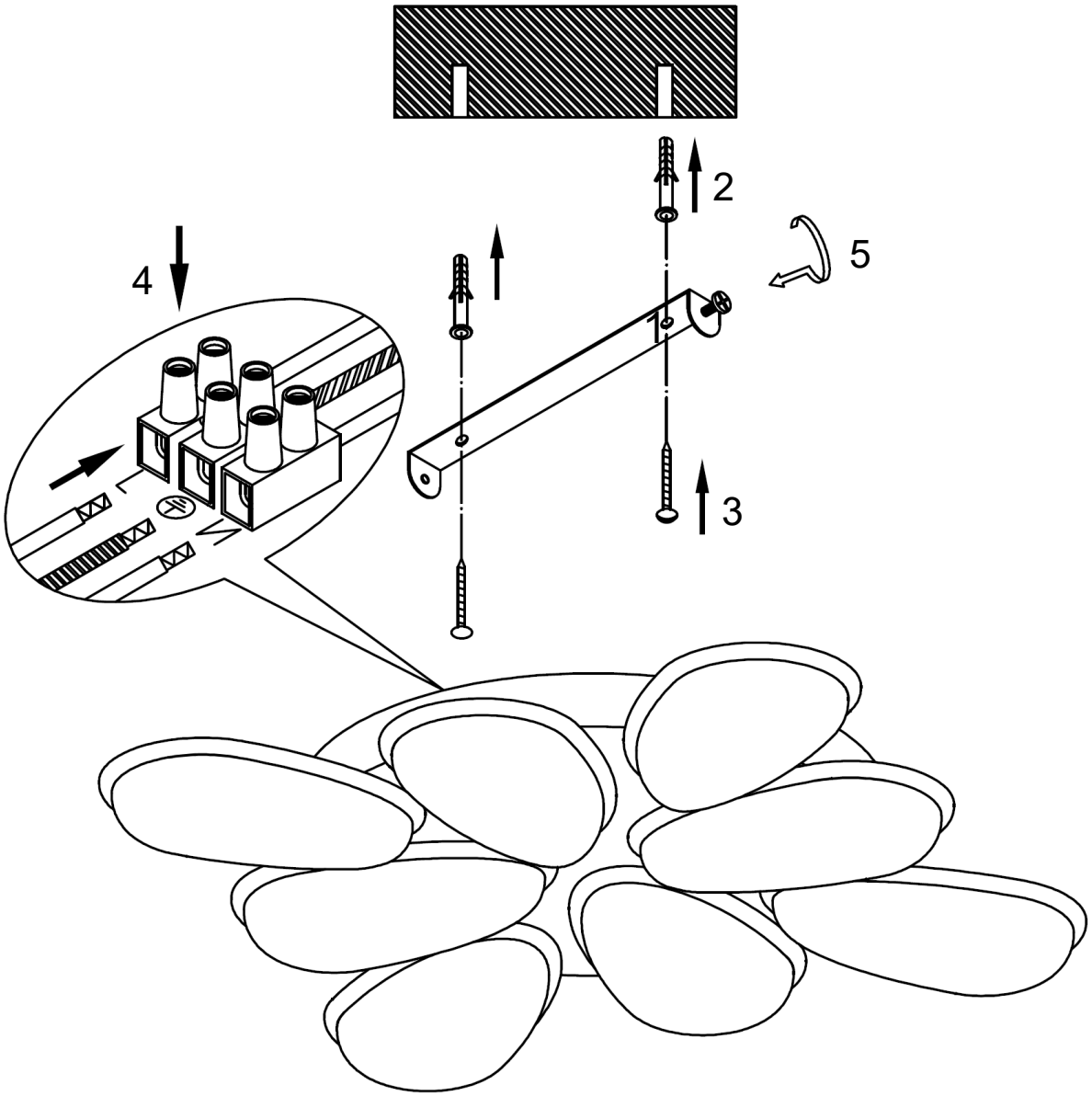


LED DRIVER & CHIP BOARD REMOVAL

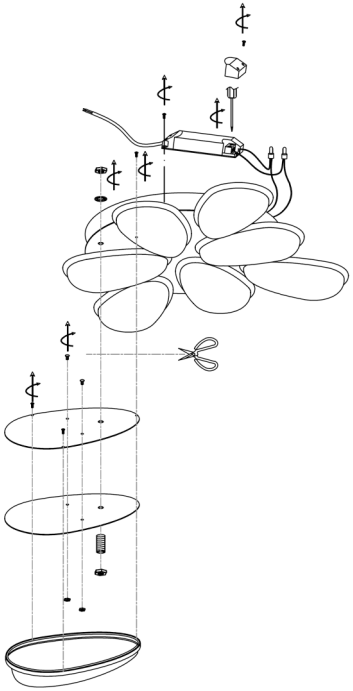

Q.C APPROVED
15/09/2020
ISSUE 1

## SAFETY INFORMATION: (Please retain for future reference)

- Always turn off the mains supply before commencing the installation of this fitting .
- This is a Class 1 product and does require an Earth connection – 220 - 240 Volts – 50Hz AC.
- This product must be installed in accordance with the national building and wiring regulations, if in doubt consult a competent electrician.
- Do not stare at the operating lamp .
- Do not modify or alter any product before or after installation. This may invalidate your warranty and may render the product un-safe.

**POSITION**

- This fitting is suitable for installation in Indoor locations only .
- Ensure sufficient access to the fitting to enable safe maintenance.
- The Luminaire should be positioned so that prolonged staring into the luminaire at a distance closer than 0.2m is not expected

**LED INFORMATION:**

- The integrated LED lamps are not replaceable, when the lamps reach the end of their life the whole luminaire shall be replaced.
- The LED lamps and chip board are removable, Please refer to diagram. Once removed this fitting must be disposed.
- This fitting is suitable for dimming.

**AFTERCARE AND MAINTENANCE:**

- Always disconnect power supply when servicing or cleaning.
- Clean only with a dry or slightly damp cloth.
- Do no use any abrasive cloths or cleaners as this may damage the product .