searchlight 5551-51 / 5551-70

1 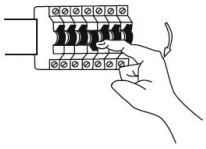

8 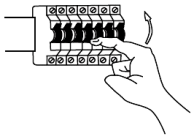

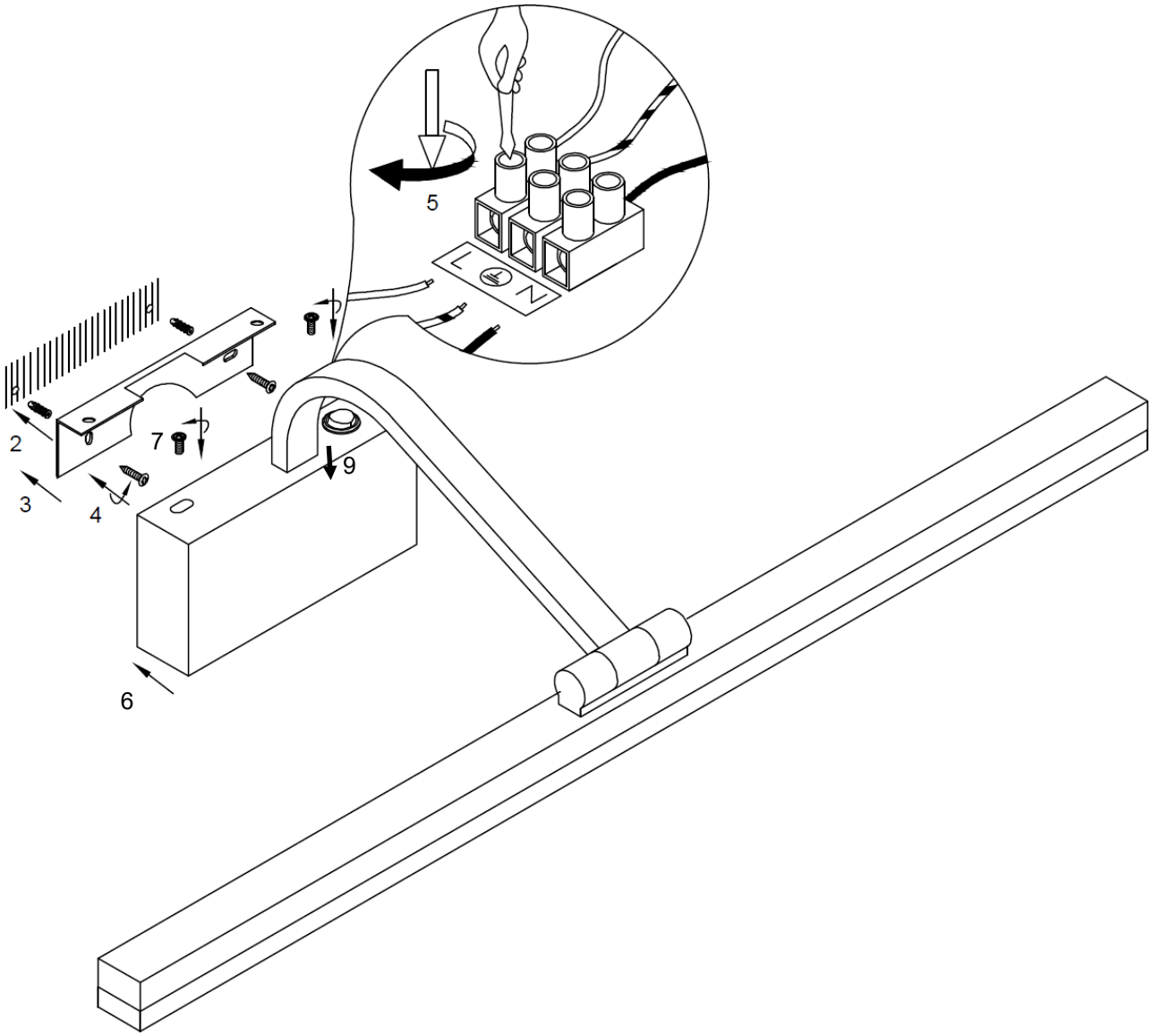

Q.C

APPROVED
19/10/2023
ISSUE 5

MAINS SUPPLY | **LIGHT FITTING**

LIVE - Possible colours : Red or Brown — LIVE

EARTH - Un sleeved copper or (Green / Yellow) — EARTH

NEUTRAL - Possible colours : Black or Blue — NEUTRAL

SAFETY INFORMATION: (Please retain for future reference)

- Always turn off the mains supply before commencing the installation of this fitting .
- This is a Class 1 product and requires a permanent Earth connection - 230 (240) Volts-50Hz .
- This product must be installed in accordance with the national building and wiring regulations, if in doubt consult a qualified electrician.
- We do not recommend any modifications of the fitting as this may invalidate the warranty and render the fitting unsafe .
- This fitting is suitable for installation in Indoor locations only .
- Do not mount the fitting in a damp atmosphere.
- The Luminaire should be positioned so that prolonged staring into the luminaire at a distance closer than 0.2m is not expected.
- Ensure sufficient access to the fitting to enable safe maintenance.

LAMP INFORMATION:

- The integrated LED lamps cannot be replaced, when the LED lamps reach the end of their life the whole luminaire shall be replaced
- This fitting is not suitable for diming .
- The LED lamps and chip board are not removable

AFTERCARE AND MAINTENANCE:
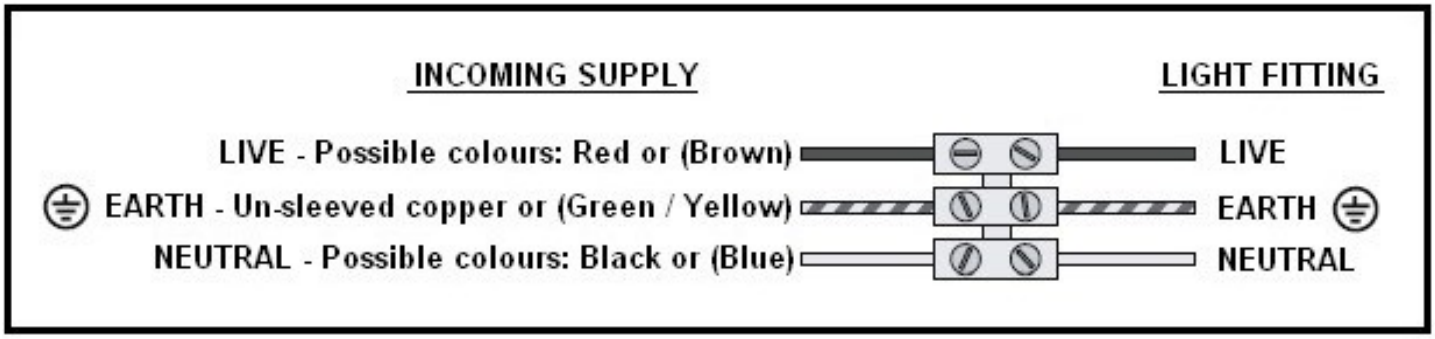
- Always disconnect power supply when servicing or cleaning.
- Clean only with a dry or slightly damp cloth.
- Do no use any abrasive cloths or cleaners as this may damage the product