searchlight

43581-1

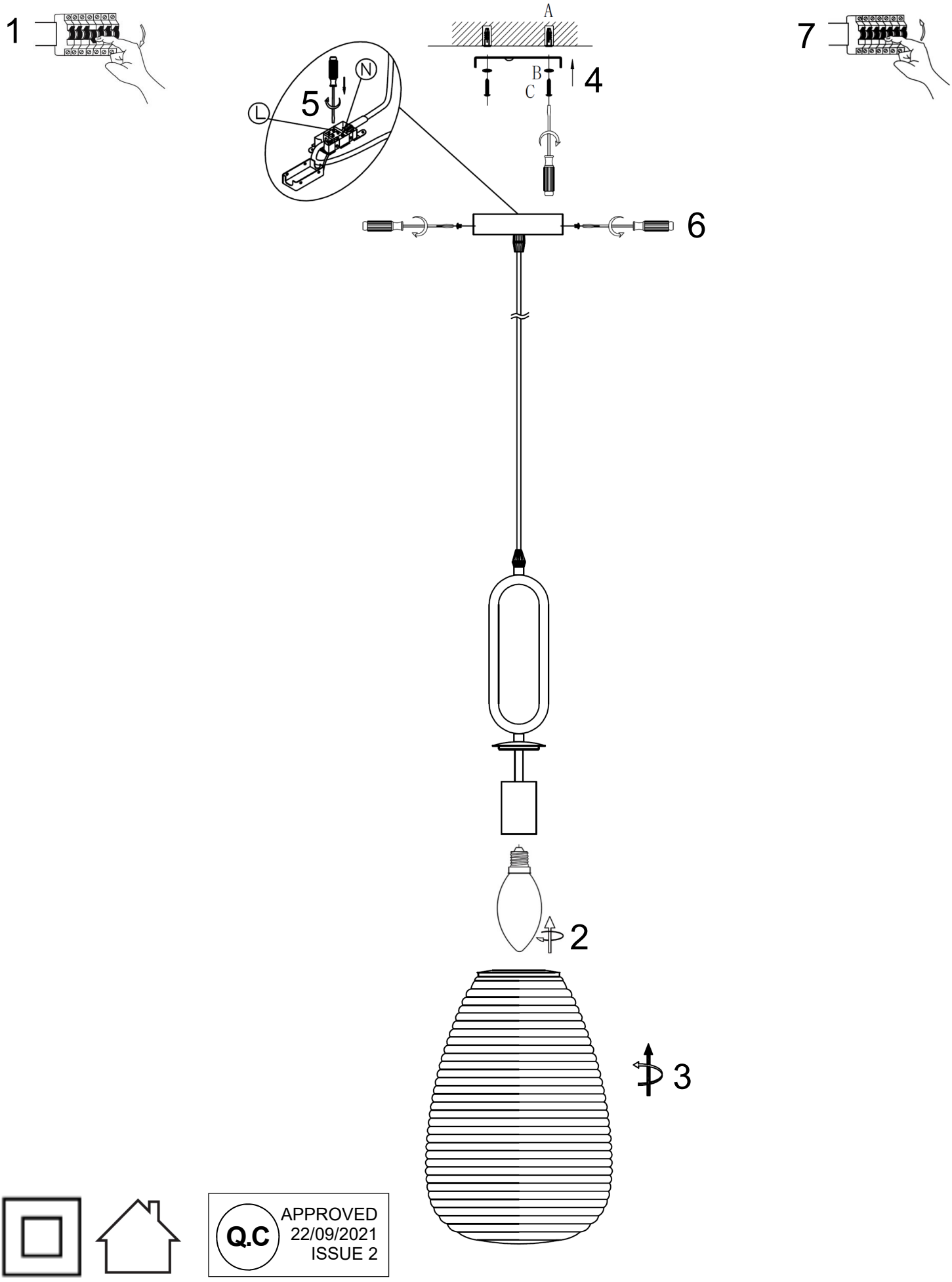

Q.C APPROVED
22/09/2021
ISSUE 2

SAFETY INFORMATION: (Please retain for future reference)

- Always turn off the mains supply before commencing the installation of this fitting .
- This is a Class 2 product and does not require an Earth connection
- This product must be installed in accordance with the national building regulations, if in doubt consult a qualified electrician.
- This fitting is suitable for installation in Indoor locations only .
- Do not mount the fitting in a damp atmosphere.
- Do not stare at the operating lamp when using LED lamps .
- The Luminaire should be positioned so that prolonged staring into the luminaire at a distance closer than 0.2m is not expected
- Ensure sufficient access to the fitting to enable safe maintenance.

LAMP INFORMATION

- Do not exceed the maximum wattage and bulb type stated on the lamp holder.
- This fitting is suitable for use with normal incandescent or LED lamps.
- This fitting is suitable for dimming , however if the luminaire is fitted with LED lamps they must be a “dimmable “ version

AFTERCARE AND MAINTENANCE:
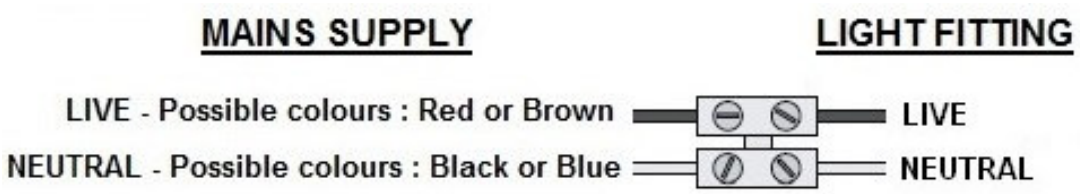
- Always disconnect power supply when servicing or cleaning.
- Clean only with a dry or slightly damp cloth.
- Do no use any abrasive cloths or cleaners as this may damage the product