searchlight

3696-6

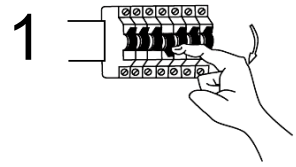

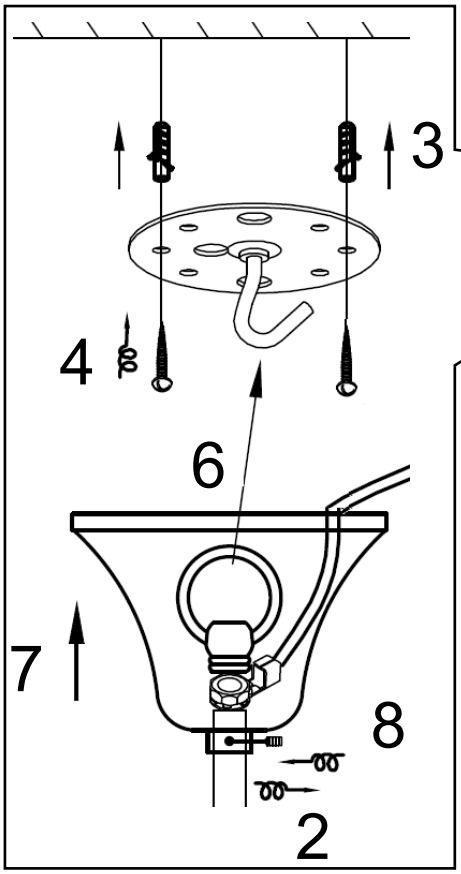

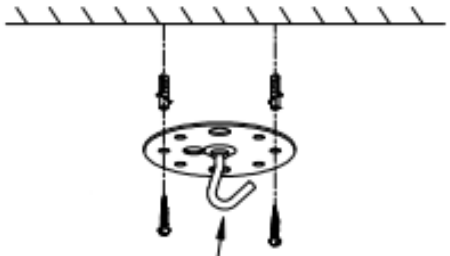

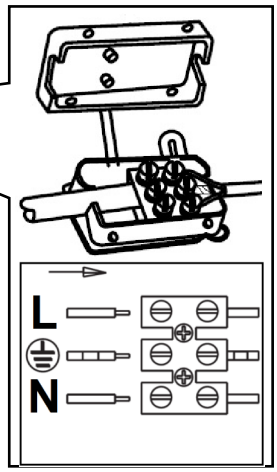

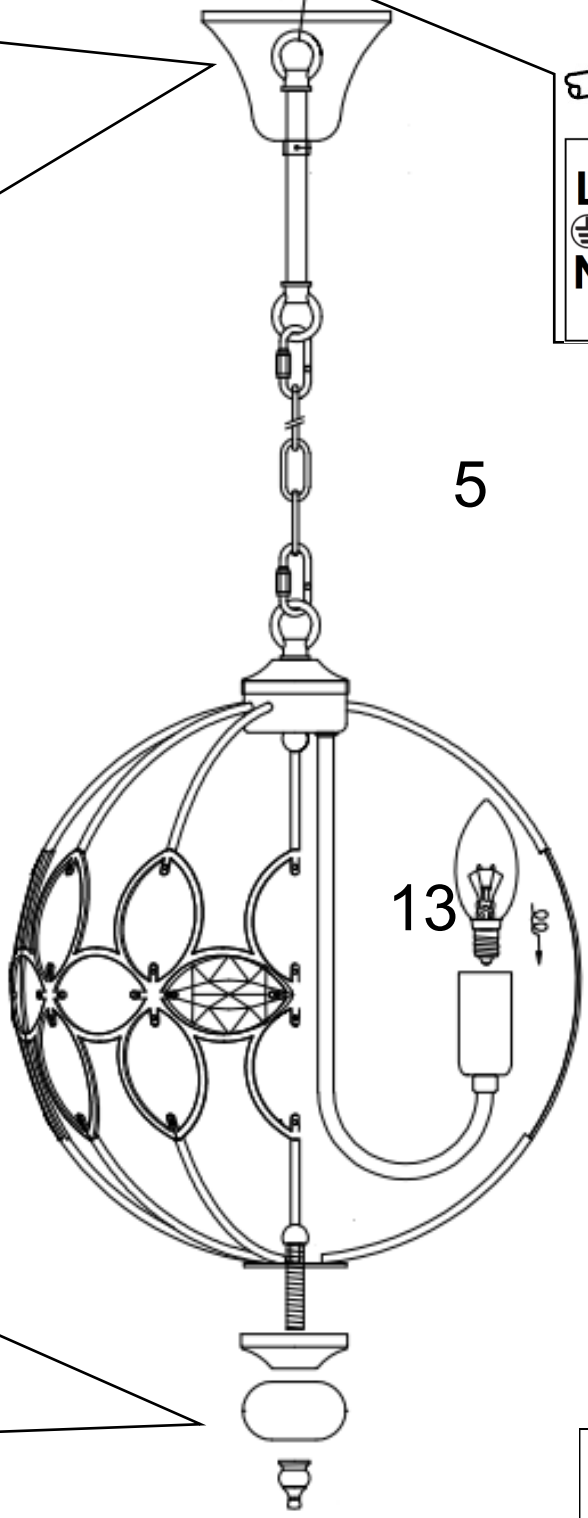

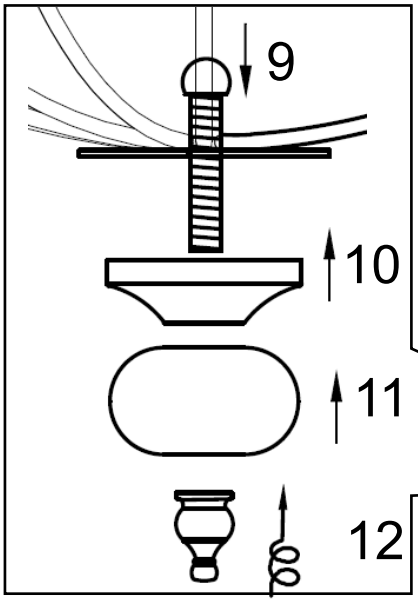

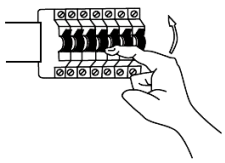

Q.C APPROVED
21/04/2021
ISSUE 2

SAFETY INFORMATION: (Please retain for future reference)

- Always turn off the mains supply before commencing the installation of this fitting .
- This is a Class 1 product and requires an Earth connection – 230 (240) Volts – 50Hz AC.

- This product must be installed in accordance with the national building and wiring regulations, if in doubt consult a qualified electrician.
- We do not recommend any modifications of the fitting , (*with the exception of cable and chain shortening) as this may invalidate the warranty and render the fitting unsafe .
- This fitting is suitable for installation in Indoor locations only .
- Do not mount the fitting in a damp atmosphere.
- Allow bulbs to cool before replacing them.
- Ensure sufficient access to the fitting to enable safe maintenance.

LAMP INFORMATION:

- Do not exceed the maximum wattage and bulb type stated on the lamp holder.
- The fitting is compatible with energy efficient LED lamps in their available maximum wattage or equivalent wattage

DIMMING:

This fitting maybe dimmed when using a suitable wall dimmer ,when using dimmable LED lamps the dimmer must be capable of dimming this type of lamp.

ADDITIONAL INFORMATION:

- If the height of the fitting requires shortening we recommend that the removal of any chain links and supply cable that may need to be cut to a shorter length is done by a qualified electrician (Remember to mark clear cable with Live, Neutral and Earth prior to removing from the terminal block). The length of the supply cable CANNOT be increased .

AFTERCARE AND MAINTENANCE:

- Always disconnect power supply when servicing or cleaning.
- Clean only with a dry or slightly damp cloth.
- Do no use any abrasive cloths or cleaners as this may damage the product

nbol on the product indicates that this product must not be disposed of with your normal old waste. Instead, it is your responsibility to dispose of your waste equipment by handing a designated collection point for the recycling of wasted electrical and electronic equipment. For more information about recycling please contact your local council or your household waste disposal service or the shop where you purchased the product.