searchlight

1842-2

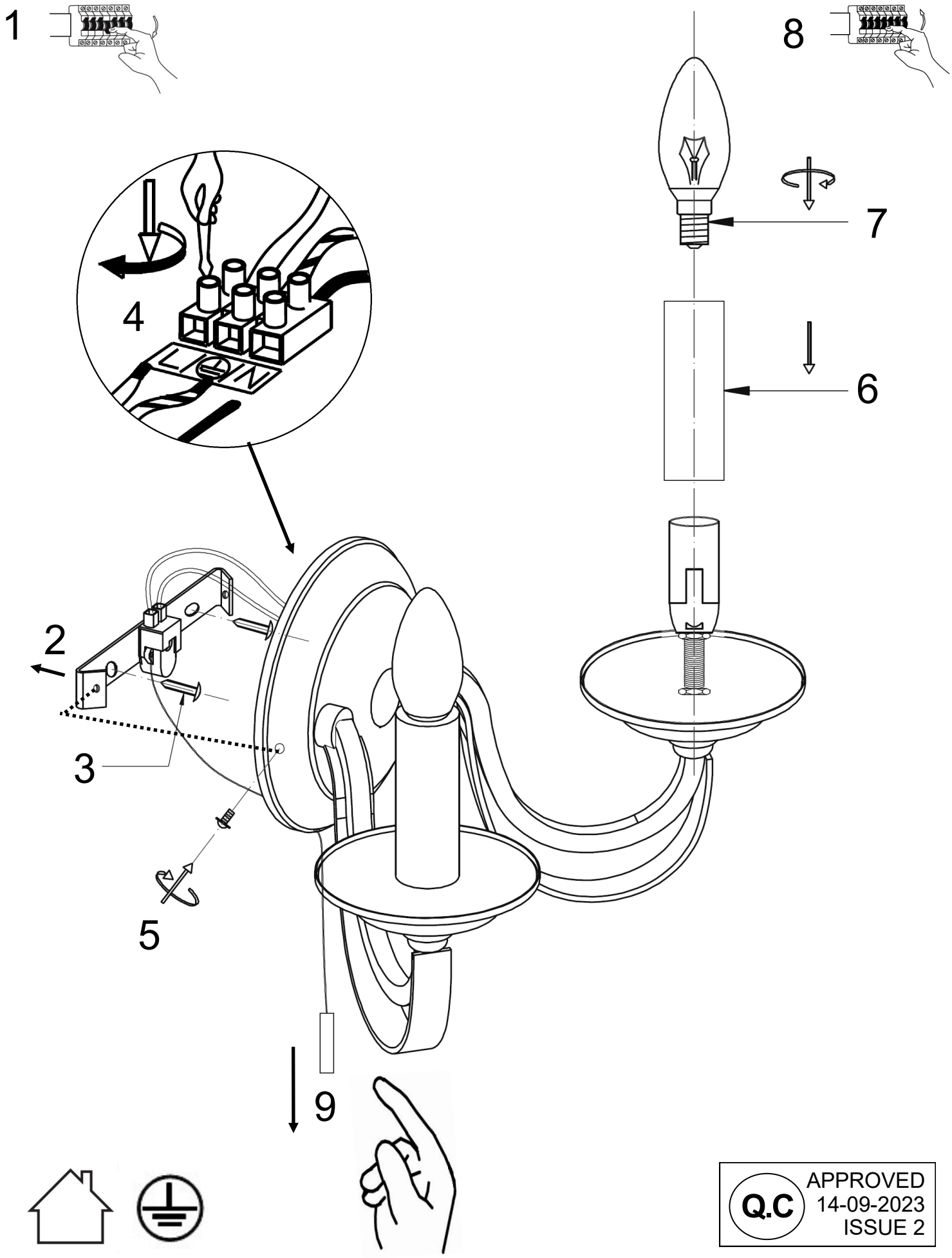

APPROVED
14-09-2023
ISSUE 2

SAFETY INFORMATION: (Please retain for future reference)

- Always turn off the mains supply before commencing the installation of this fitting .
- This is a Class 1 product and requires a permanent Earth connection - 230 (240) Volts-50Hz .
- This product must be installed in accordance with the national building and wiring regulations, if in doubt consult a qualified electrician.
- We do not recommend any modifications of the fitting as this may invalidate the warranty and render the fitting unsafe .
- This fitting is suitable for installation in Indoor locations only .
- Do not mount the fitting in a damp atmosphere.
- Allow the bulbs to cool (10 minutes) before replacing them
- Ensure sufficient access to the fitting to enable safe maintenance.

LAMP INFORMATION:

- This fitting is suitable for use with normal incandescent or LED lamps.
- This fitting is suitable for dimming , however if the luminaire is fitted with LED lamps they must be a “dimmable “ version
- Do not exceed the maximum rated wattage stated on the lamp holders.

AFTERCARE AND MAINTENANCE:
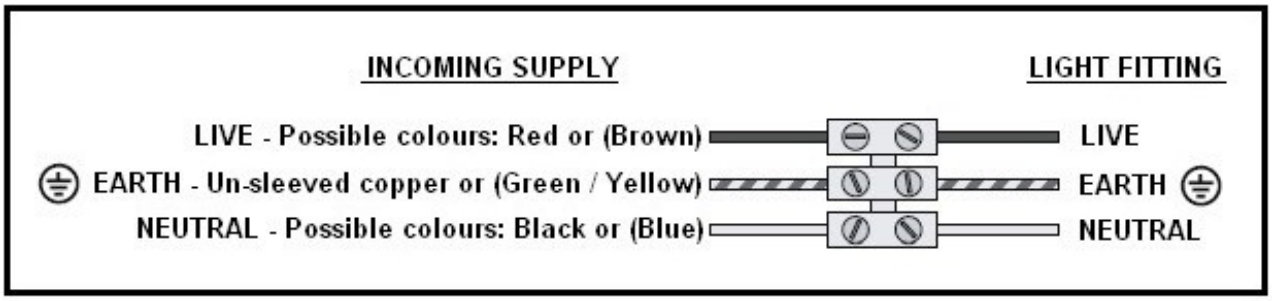
- Always disconnect power supply when servicing or cleaning.
- Clean only with a dry or slightly damp cloth.
- Do no use any abrasive cloths or cleaners as this may damage the product